RAYSTAR

RAYSTAR Optronics, Inc.
曜凌光電股份有限公司

曜凌光電股份有限公司
Raystar Optronics, Inc.
42881台中市大雅區科雅路25號5樓
5F, No. 25, Keya Road, Daya Dist., Taichung City 42881, Taiwan
T：+886-4-2565-0761 | F：+886-4-2565-0760
sales@raystar-optronics.com | www.raystar-optronics.com

RFC350L-AIW-DNS

SPECIFICATION

CUSTOMER:

APPROVED BY	
PCB VERSION	
DATE	

FOR CUSTOMER USE ONLY

SALES BY	APPROVED BY	CHECKED BY	PREPARED BY

Release DATE:

TFT Display Inspection Specification: https://www.raystar-optronics.com/download/products.htm
Precaution in use of TFT module: https://www.raystar-optronics.com/download/declaration.htm

Revision History

VERSION	DATE	REVISED PAGE NO.	Note
0	2013/04/18		First issue
A	2013/07/08		Modify the packing diagram
B	2013/11/15		Modify Version
C	2014/07/01		Modify Optical Characteristics Modify Package Specification
D	2014/12/15		Add size & Surface. Modify Interfae (YU,YD,XR) & Block Diagram& Static electricity test.
E	2015/04/28		Modify Reliability
F	2016/01/21		Modify Static electricity test
G	2016/08/08		Remove Package Specification
H	2016/08/11		Modify Vibration test
I	2016/10/17		Modify Summary
J	2017/03/30		Add Aspect Ratio
K	2017/04/17		Correct Contour Drawing
L	2017/07/07		Modify FPC
M	2018/06/13		Modify LED voltage
N	2019/01/14		Add Uniformity.

RAYSTAR OPTRONICS

Contents

1.Module Classification Information

2.Summary

3.General Specification

4.Interface

5.Contour Drawing

6.Block Diagram

7.Absolute Maximum Ratings

8.Electrical Characteristics

9.DC Characteristics

10.AC Characteristics

11.Optical Characteristics

12.Reliability

13.Touch Panel Information

14.Other

RAYSTAR OPTRONICS

1.Module Classification Information

R	F	C	35	0L	-	A	I	W	-	D	N	S
1	2	3	4	5	-	6	7	8	-	9	10	11

Item	Description	
1	R：Raystar Optronics Inc.	
2	Display Type：F→TFT Type, J→ Custom TFT	
3	Solution: A: 128x160 B:320x234 C:320x240 D:480x234 E:480x272 F:800x480 G:640x480 H:1024x600 I:320x480 J:240x320 K:1280x800 L:240x400 M:1024x768 N:128x128 O:480x800 P:640x320 Q:800x600 S:480x128 T:800x320	
4	Display Size：3.5” TFT	
5	Version Code.	
6	Model Type: A：TFT LCD E：TFT+FR+CONTROL BOARD J：TFT+FR+A/D BOARD N：TFT+FR+A/D BOARD+CONTROL BOARD S：TFT+FR+POWER BOARD (DC TO DC) 1：TFT+CONTROL BOARD	6：TFT+FR H：TFT+D/V BOARD I：TFT+FR+D/V BOARD B：TFT+POWER BD
7	Polarizer Type, Temperature range, View direction	I→Transmissive, W. T, 6:00 ; C→Transmissive, N. T, 6:00 L→Transmissive, W.T,12:00 ; F→Transmissive, N.T,12:00 Y→Transmissive,W.T, IPS TFT ; A→Transmissive, N.T, IPS TFT Z→Transmissive, W.T, O-TFT R→Transmissive, Super W.T, O-TFT N→Transmissive, Super W.T, 6:00; Q→Transmissive, Super W.T, 12:00 V→Transmissive, Super W.T, VA TFT
8	Backlight	W：LED, White / H：LED, High Light White F：CCFL, White
9	Driver Method	D: Digital A: Analog L：LVDS M:MIPI
10	Interface	N：without control board A：8Bit B：16Bit S:SPI Interface R: RS232 U:USB I: I2C
11	TS	N：Without TS S：resistive touch panel C：capacitive touch panel capacitive touch panel (G-F-F) G：capacitive touch panel(G-G)

RAYSTAR OPTRONICS

2.Summary

TFT 3.5”is a TN transmissive type color active matrix TFT liquid crystal display that use amorphous silicon TFT as switching devices. This module is a composed of a TFT_LCD module, It is usually designed for industrial application and this module follows RoHs,

RAYSTAR OPTRONICS

3.General Specifications

- Size: 3.5 inch
- Dot Matrix: 320 x RGBx240(TFT) dots
- Module dimension: 76.84x 63.84x 4.37 mm
- Active area: 70.08 x 52.56 mm
- Dot pitch: 0.073 x 0.219 mm
- LCD type: TFT, Normally White, Transmissive
- View Direction: 12o'clock
- Gray Scale Inversion Direction: 6 o'clock
- Aspect Ratio: 4:3
- Backlight Type: LED ,Normally White
- With /Without TP: With RTP
- Surface: Anti-Glare

*Color tone slight changed by temperature and driving voltage.

RAYSTAR OPTRONICS

4.Interface

4.1. LCM PIN Definition

Pin	Symbol	Function	Remark
1	LED-	Power for LED backlight cathode	
2	LED-	Power for LED backlight cathode	
3	LED+	Power for LED backlight anode	
4	LED+	Power for LED backlight anode	
5	YU	Top electrode	
6	XL	Left electrode	
7	NC	No connect	
8	/RESET	Hardware reset	
9	SPENA	Chip select pin of serial interface	
10	SPCLK	Clock pin of serial interface	
11	SPDAT	Data input pin in serial mode	
12	B0	Data bus	
13	B1	Data bus	
14	B2	Data bus	
15	B3	Data bus	
16	B4	Data bus	
17	B5	Data bus	
18	B6	Data bus	
19	B7	Data bus	
20	G0	Data bus	
21	G1	Data bus	
22	G2	Data bus	
23	G3	Data bus	
24	G4	Data bus	
25	G5	Data bus	
26	G6	Data bus	
27	G7	Data bus	
28	R0	Data bus	
29	R1	Data bus	

RAYSTAR OPTRONICS

30	R2	Data bus	
31	R3	Data bus	
32	R4	Data bus	
33	R5	Data bus	
34	R6	Data bus	
35	R7	Data bus	
36	HSYNC	Line synchronization signal	
37	VSYNC	Frame synchronization signal	
38	DCLK	Dot-clock signal and oscillator source	
39	NC	No connect	
40	NC	No connect	
41	VCC	Power Supply	
42	VCC	Power Supply	
43	YD	Bottom electrode	
44	XR	Right electrode	
45	NC	No connect	
46	NC	No connect	
47	NC	No connect	
48	SEL2	Input pin to select input interface mode	
49	SEL1	Input pin to select input interface mode	
50	SEL0	Input pin to select input interface mode	
51	NC	No connect	
52	DE	Display enable pin from controller. Internal pull high Connect to VCCIO or floating if not used	
53	DGND	System ground pin of the IC. Connect to system ground.	
54	AVSS	Grounding for analog circuit Connect to system ground	

Note:
1.The mode control (SEL2) not use, it can't control CCIR601 interface, If not use CCIR601, it can floating.
2. For digital RGB input data format, both SYNC mode and DE+SYNC mode are supported. If DE signal is fixed low, SYNC mode is used. Otherwise, DE+SYNC mode is used. Suggest used SYNC mode!!_
3. Usually pull high._
4. IF select serial RGB or CCIR601/656 input mode is selected, only DX0-DX7 used, and the other short to GND, Only selected serial RGB_CCIR601/656 interface, DX BUS will enable, Digital input mode DX0 is LSB and DX7 is MSB.

RAYSTAR OPTRONICS

5. Control the input data format

SEL2	SEL1	SEL0	Format	Operating Frequency
0	0	0	Parallel-RGB data format (only support stripe type color filter)	6.5MHZ
0	0	1	Serial-RGB data format	19.5 MHZ
0	1	0	CCIR 656data format (640RGB)	24.54 MHZ
0	1	1	CCIR 656data format (720RGB)	27 MHZ
1	0	0	YUV mode A data format(Cr-Y-Cb-Y)	24.54 MHZ
1	0	1	YUV mode A data format(Cr-Y-Cb-Y)	27 MHZ
1	1	0	YUV mode B data format(Cr-Y-Cr-Y)	27 MHZ
1	1	1	YUV mode B data format(Cr-Y-Cr-Y)	24.54 MHZ

Input format	DOTCLK Ferg(MHz)	Display Data	Active Area (DOTCLK)
YUV mode	24.54	640	1280
	27	720	1440

Mode	D[23:16]	D[15:8]	D[7:0]	IHS	IVS	DEN
ITU-R BT 656	D[23:16]	GND	GND	NC	NC	NC
ITU-R BT 601	D[23:16]	GND	GND	IHS	IVS	NC
8 bit RGB	D[23:16]	GND	GND	IHS	IVS	NC for HV Mode
						DEN for DEN Mode
24 bit RGB	R[7:0]	G[7:0]	B[7:0]	IHS	IVS	NC for HV Mode
						DEN for DEN Mode

RAYSTAR OPTRONICS

4.2. SPI timing Characteristics

Parameter	Symbol	Min.	Typ.	Max.	Unit
SPCK period	Tcx	60	-	-	ns
SPCK high width	Tcxh	30	-	-	ns
SPCK low width	Tcxl	30	-	-	ns
Data setup time	Tsu1	12	-	-	ns
Data hold time	Thd1	12	-	-	ns
SPENA to SPCK setup time	Tcs	20	-	-	ns
SPENA to SPDA hold time	Tce	20	-	-	ns
SPENA high pulse width	Tcd	50	-	-	ns
SPDA output latency	Tcs	-	1/2	-	Tcx

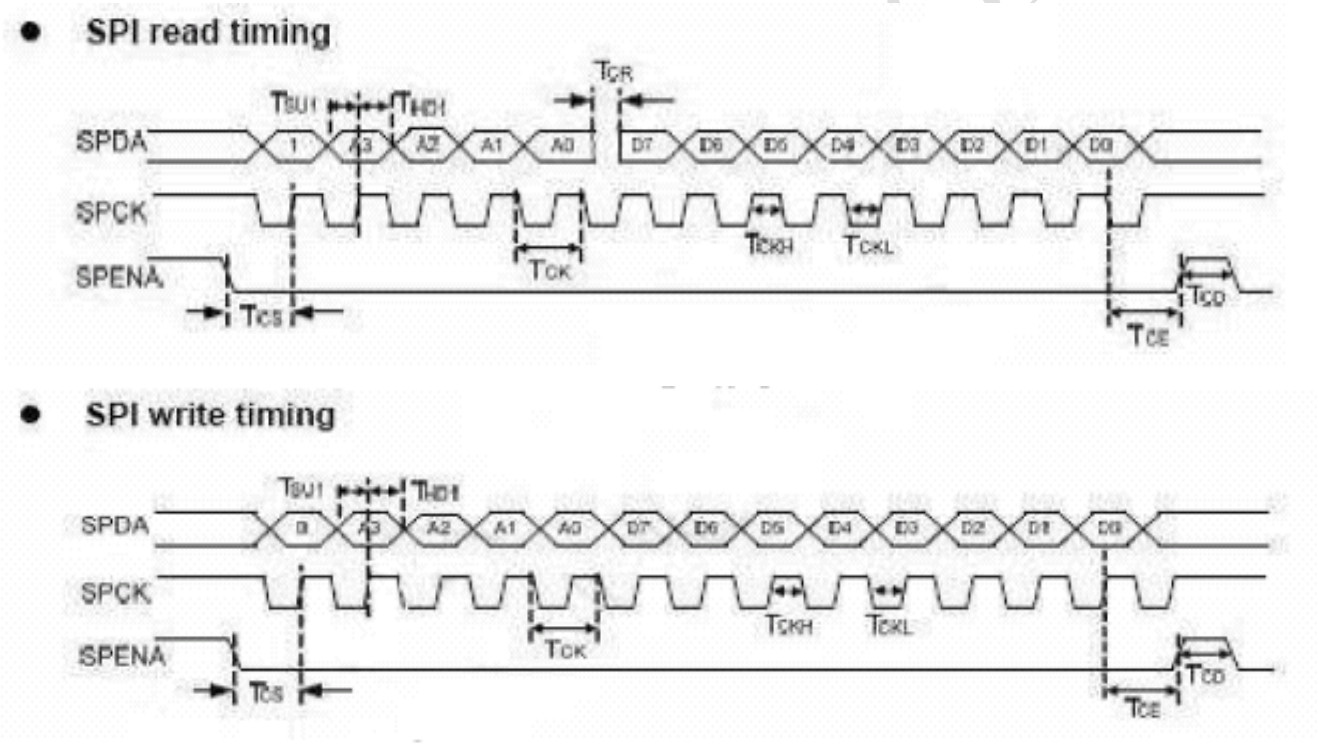

Figure11 SPI read and write timing

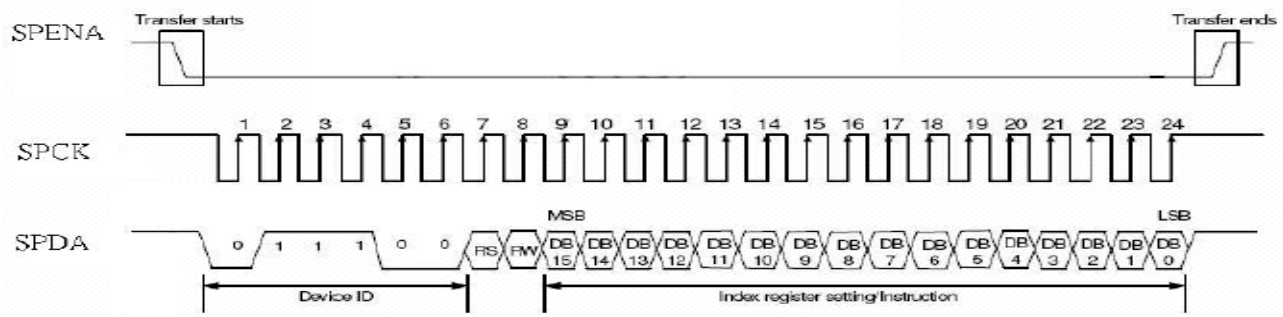

Figure12 SPI timing

4.3. Basic Display Color and Gray Scale

Color		Input Color Data																							
		Red								Green								Blue							
		MSB							LSB	MSB							LSB	MSB							LSB
		R7	R6	R5	R4	R3	R2	R1	R0	G7	G6	G5	G4	G3	G2	G1	G0	B7	B6	B5	B4	B3	B2	B1	B0
Basic Colors	Black	0	0	0	0	0	0	0	0	0	0	0	0	0	0	0	0	0	0	0	0	0	0	0	0
	Red(255)	1	1	1	1	1	1	1	1	0	0	0	0	0	0	0	0	0	0	0	0	0	0	0	0
	Green(255)	0	0	0	0	0	0	0	0	1	1	1	1	1	1	1	1	0	0	0	0	0	0	0	0
	Blue(255)	0	0	0	0	0	0	0	0	0	0	0	0	0	0	0	0	1	1	1	1	1	1	1	1
	Cyan	0	0	0	0	0	0	0	0	1	1	1	1	1	1	1	1	1	1	1	1	1	1	1	1
	Magenta	1	1	1	1	1	1	1	1	0	0	0	0	0	0	0	0	1	1	1	1	1	1	1	1
	Yellow	1	1	1	1	1	1	1	1	1	1	1	1	1	1	1	1	0	0	0	0	0	0	0	0
	White	1	1	1	1	1	1	1	1	1	1	1	1	1	1	1	1	1	1	1	1	1	1	1	1
Red	Red(0) Dark	0	0	0	0	0	0	0	0	0	0	0	0	0	0	0	0	0	0	0	0	0	0	0	0
	Red(1)	0	0	0	0	0	0	0	1	0	0	0	0	0	0	0	0	0	0	0	0	0	0	0	0
	Red(2)	0	0	0	0	0	0	1	0	0	0	0	0	0	0	0	0	0	0	0	0	0	0	0	0
	:	:	:	:	:	:	:	:	:	:	:	:	:	:	:	:	:	:	:	:	:	:	:	:	:
	Red(253)	1	1	1	1	1	1	0	1	0	0	0	0	0	0	0	0	0	0	0	0	0	0	0	0
	Red(254)	1	1	1	1	1	1	1	0	0	0	0	0	0	0	0	0	0	0	0	0	0	0	0	0
	Red(255) Bright	1	1	1	1	1	1	1	1	0	0	0	0	0	0	0	0	0	0	0	0	0	0	0	0
Green	Green(0) Dark	0	0	0	0	0	0	0	0	0	0	0	0	0	0	0	0	0	0	0	0	0	0	0	0
	Green(1)	0	0	0	0	0	0	0	0	0	0	0	0	0	0	0	1	0	0	0	0	0	0	0	0
	Green(2)	0	0	0	0	0	0	0	0	0	0	0	0	0	0	1	0	0	0	0	0	0	0	0	0
	:	:	:	:	:	:	:	:	:	:	:	:	:	:	:	:	:	:	:	:	:	:	:	:	:
	Green(253)	0	0	0	0	0	0	0	0	1	1	1	1	1	1	0	1	0	0	0	0	0	0	0	0
	Green(254)	0	0	0	0	0	0	0	0	1	1	1	1	1	1	1	0	0	0	0	0	0	0	0	0
	Green(255)Bright	0	0	0	0	0	0	0	0	1	1	1	1	1	1	1	1	0	0	0	0	0	0	0	0
Blue	Blue(0) Dark	0	0	0	0	0	0	0	0	0	0	0	0	0	0	0	0	0	0	0	0	0	0	0	0
	Blue(1)	0	0	0	0	0	0	0	0	0	0	0	0	0	0	0	0	0	0	0	0	0	0	0	1
	Blue(2)	0	0	0	0	0	0	0	0	0	0	0	0	0	0	0	0	0	0	0	0	0	0	1	0
	:	:	:	:	:	:	:	:	:	:	:	:	:	:	:	:	:	:	:	:	:	:	:	:	:
	Blue(253)	0	0	0	0	0	0	0	0	0	0	0	0	0	0	0	0	1	1	1	1	1	1	0	1
	Blue(254)	0	0	0	0	0	0	0	0	0	0	0	0	0	0	0	0	1	1	1	1	1	1	1	0
	Blue(255) Bright	0	0	0	0	0	0	0	0	0	0	0	0	0	0	0	0	1	1	1	1	1	1	1	1

5.Contour Drawing

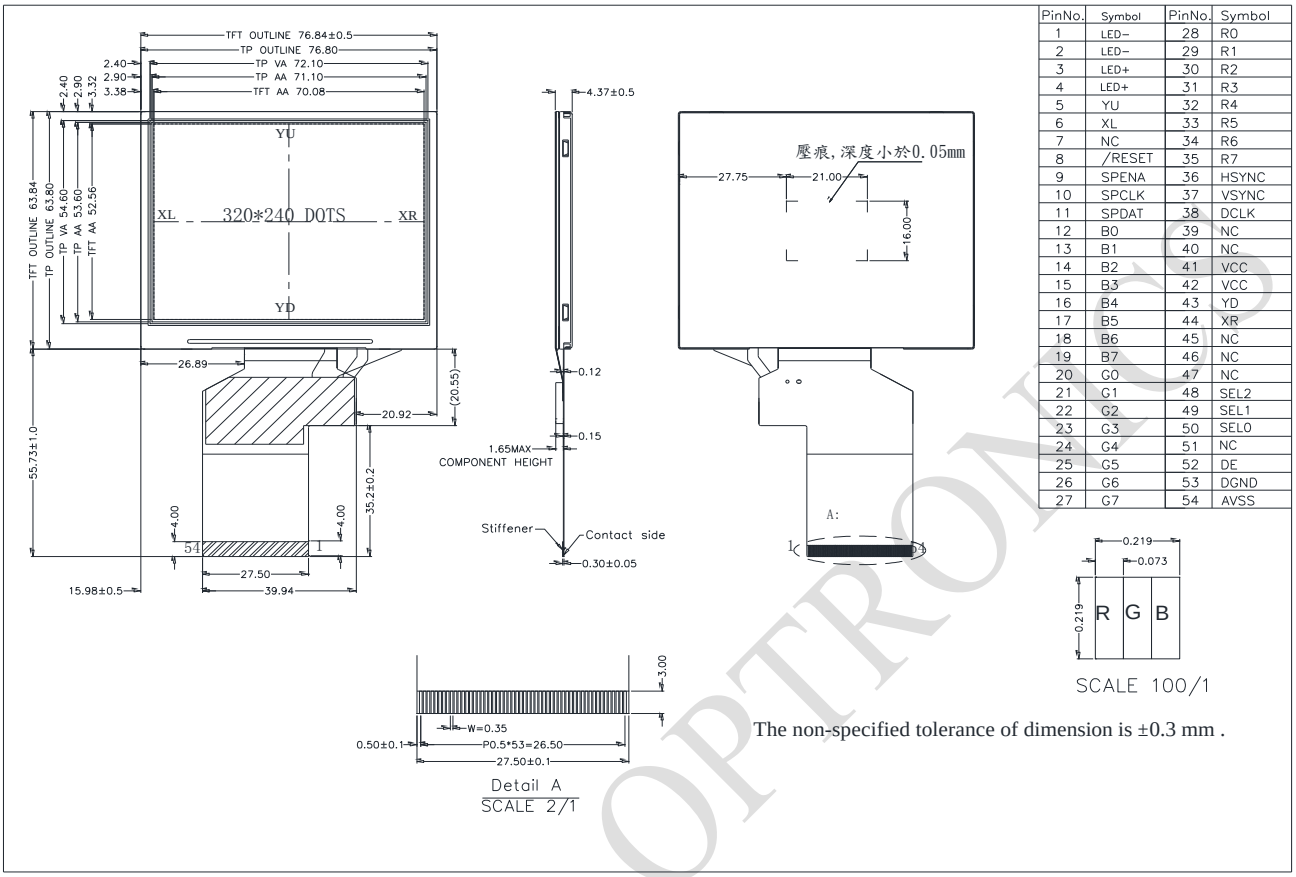

PinNo.	Symbol	PinNo.	Symbol
1	LED-	28	R0
2	LED-	29	R1
3	LED+	30	R2
4	LED+	31	R3
5	YU	32	R4
6	XL	33	R5
7	NC	34	R6
8	/RESET	35	R7
9	SPENA	36	HSYNC
10	SPCLK	37	VSYNC
11	SPDAT	38	DCLK
12	B0	39	NC
13	B1	40	NC
14	B2	41	VCC
15	B3	42	VCC
16	B4	43	YD
17	B5	44	XR
18	B6	45	NC
19	B7	46	NC
20	G0	47	NC
21	G1	48	SEL2
22	G2	49	SEL1
23	G3	50	SEL0
24	G4	51	NC
25	G5	52	DE
26	G6	53	DGND
27	G7	54	AVSS

The non-specified tolerance of dimension is ±0.3 mm .

RAYSTAR OPTRONICS

6.Block Diagram

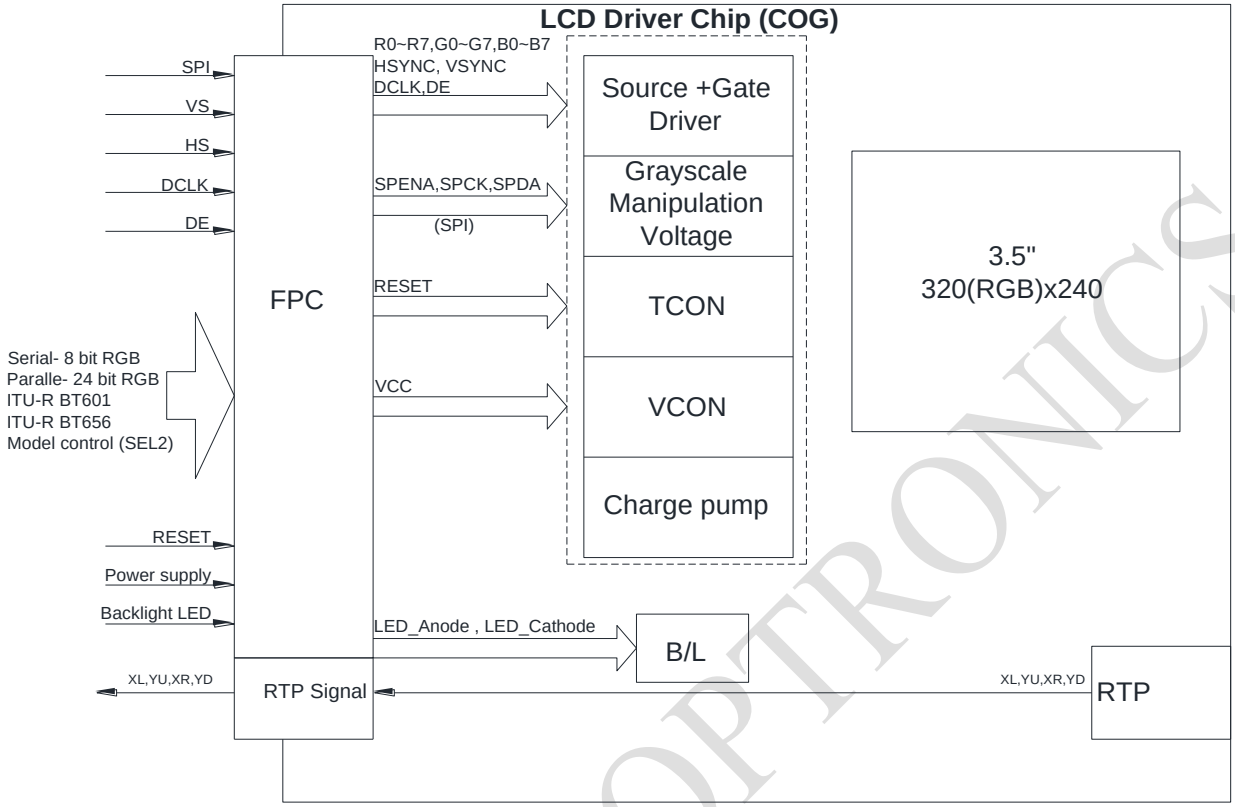

RAYSTAR OPTRONICS

7.Absolute Maximum Ratings

Item	Symbol	Min	Typ	Max	Unit
Operating Temperature	TOP	-20	—	+70	℃
Storage Temperature	TST	-30	—	+80	℃

Note: Device is subject to be damaged permanently if stresses beyond those absolute maximum ratings listed above

Temp. ≦60℃, 90% RH MAX. Temp.＞60℃, Absolute humidity shall be less than 90% RH at 60℃

RAYSTAR OPTRONICS

8.Electrical Characteristics

8.1. Operating conditions:

Item	Symbol	Min	Typ	Max	Unit	Remark
Supply Voltage For LCM	VCC	3.0	3.3	3.6	V	
Supply Current For LCM	ICC	—	8.6	15	mA	Note 1

Note 1 : This value is test for VCC =3.3V , Ta=25 ℃ only

8.2. LED driving conditions

Parameter	Symbol	Min.	Typ.	Max.	Unit	Remark
LED current		-	20	-	mA	
Power Consumption		336	384	408	mW	
LED voltage	LED+	16.8	19.2	20.4	V	Note 1
LED Life Time		-	50,000	-	Hr	Note 2,3,4

Note 1 : There are 1 Groups LED

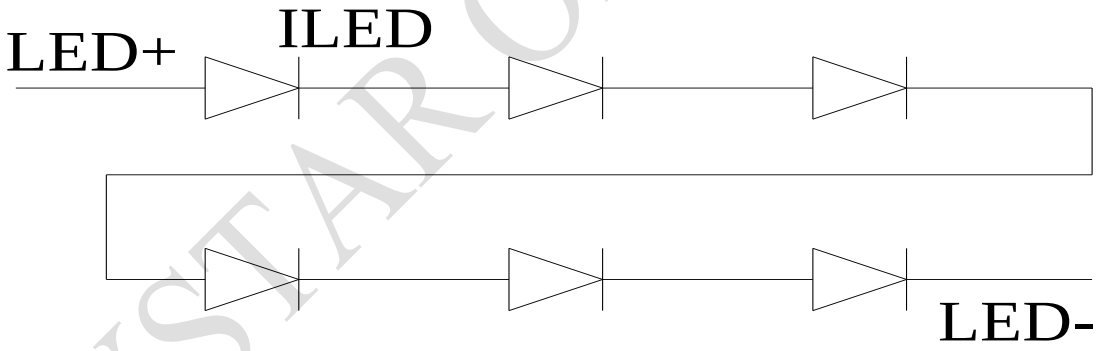

Note 2 : Ta = 25 ℃
Note 3 : Brightness to be decreased to 50% of the initial value
Note 4 : The single LED lamp case

RAYSTAR OPTRONICS

9.DC CHARATERISTICS

Parameter	Symbol	Rating			Unit	Condition
		Min	Typ	Max		
Low level input voltage	V_{IL}	0	-	0.3VCC	V	
High level input voltage	V_{IH}	0.7VCC	-	VCC	V	

RAYSTAR OPTRONICS

10.AC Characteristics

Digital Parallel RGB interface

Signal	Item	Symbol	Min	Typ	Max	Unit
Dclk	Frequency	Tosc	-	6.5	10	MHz
	High Time	Tch	-	77	-	ns
	Low Time	Tcl	-	77	-	ns
Data	Setup Time	Tsu	12	-	-	ns
	Hold Time	Thd	12	-	-	ns
Hsync	Period	TH	-	408		Tosc
	Pulse Width	THS	5	30	-	Tosc
	Back-Porch	Thb	-	38	-	Tosc
	Display Period	TEP	-	320	-	Tosc
	Hsync-den time	THE	36	68	88	-
	Front-Porch	Thf	-	20	-	Tosc
Vsync	Period	Tv	-	262	-	TH
	Pulse Width	Tvs	1	3	5	TH
	Back-Porch	Tvb	-	15	-	TH
	Display Period	Tvd	-	240	-	TH
	Front-Porch	Tvf	2	4	-	TH

Note:

1. Thp + Thb = 68, the user is make up by yourself.

2. Tv = Tvs + Tvb + Tvd + Tvf , the user is make up by yourself.

3.When SYNC mode is used,1st data start from 68th Dclk after Hsync falling

CCIR601/656 Interface

Signal	Item	Symbol	Min	Typ	Max	Unit
Dclk	Frequency	Tosc	-	37	-	ns
	High Time	Tch	-	78	-	ns
	Low Time	Tcl	-	78	-	ns
Data	Setup Time	Tsu	12	-	-	ns
	Hold Time	Thd	12	-	-	ns

RAYSTAR OPTRONICS

10.1. Waveform

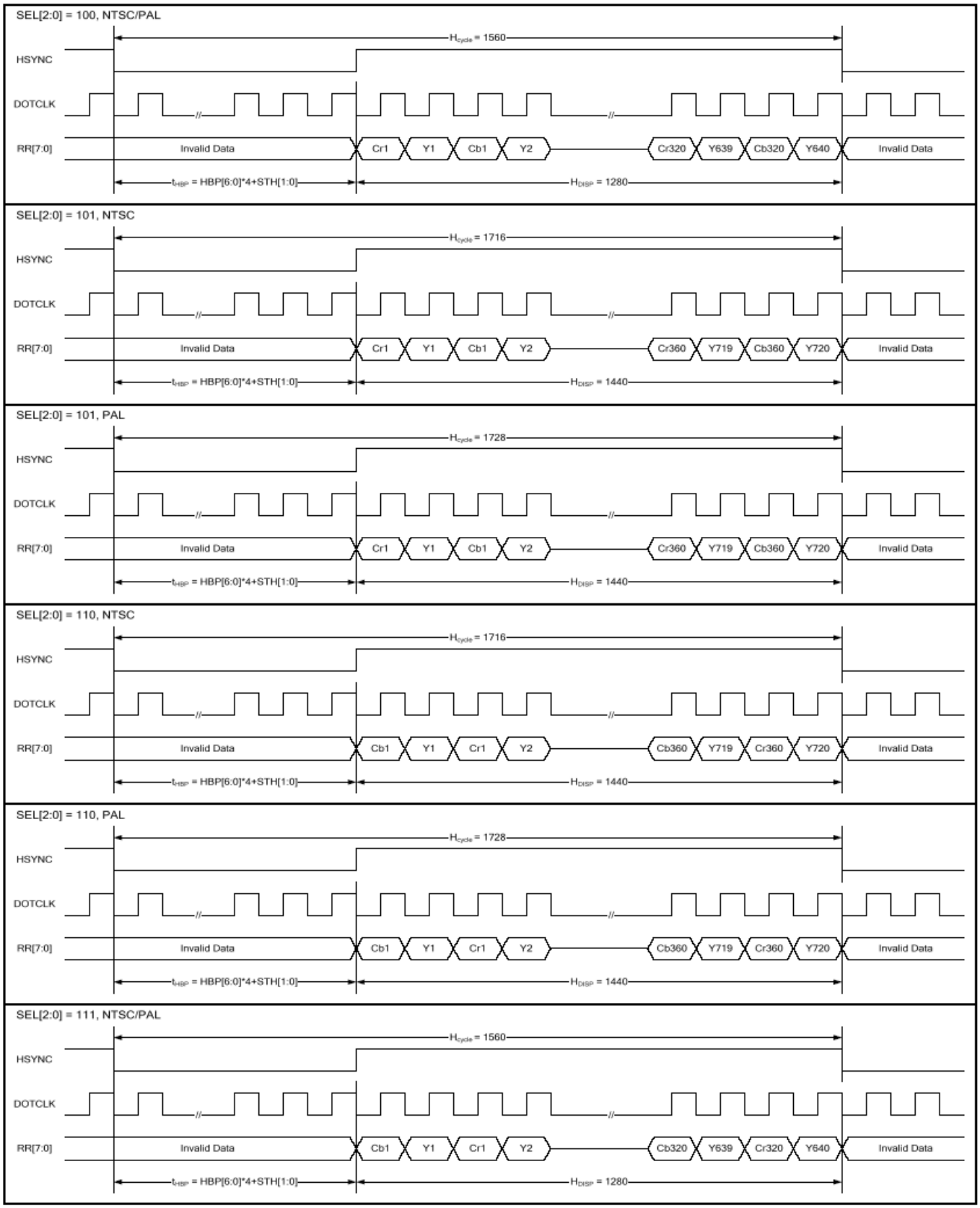

Figure 1 CCIR601 Horizontal Timing

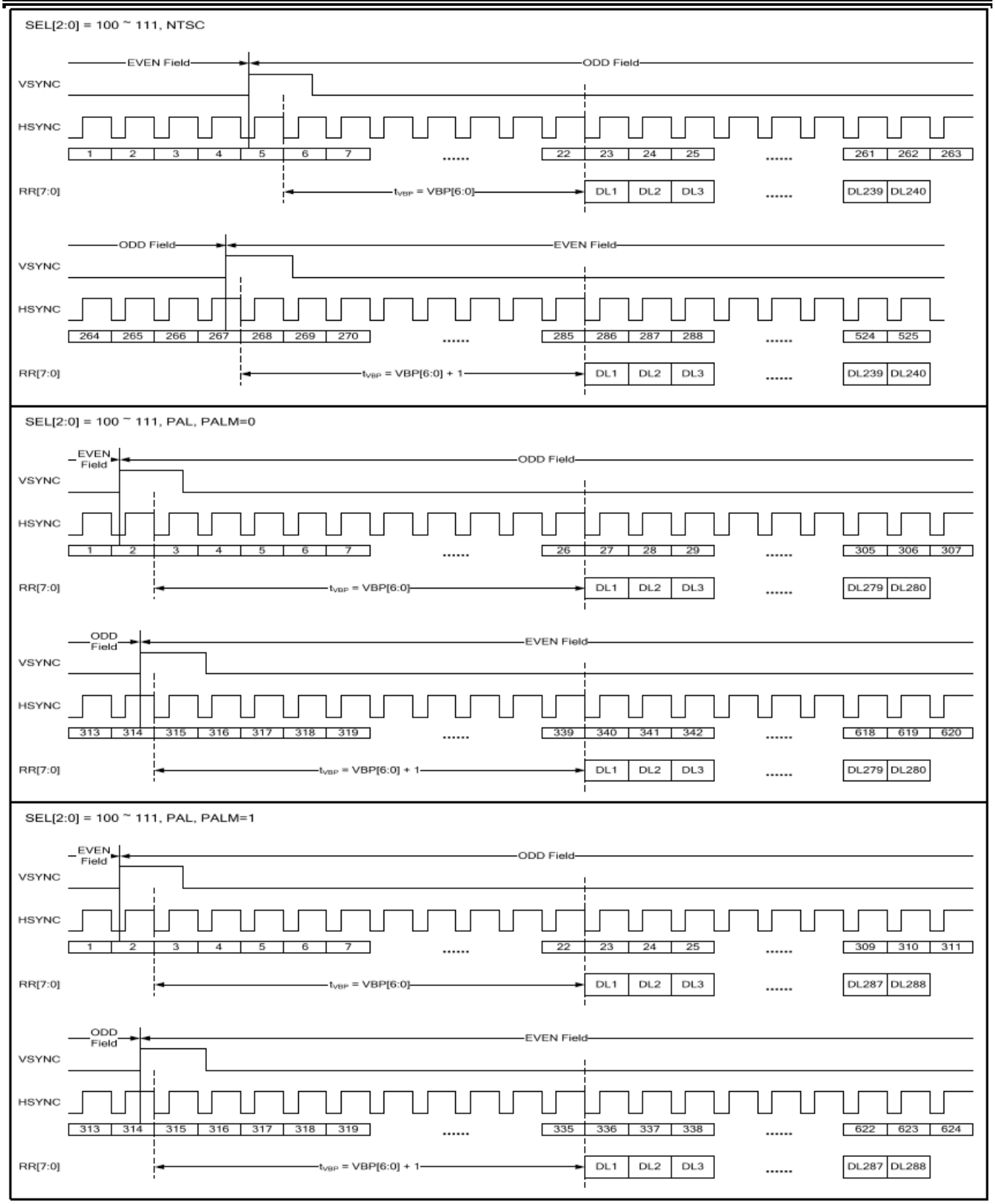

Figure 1 CCIR601 Vertical Timing

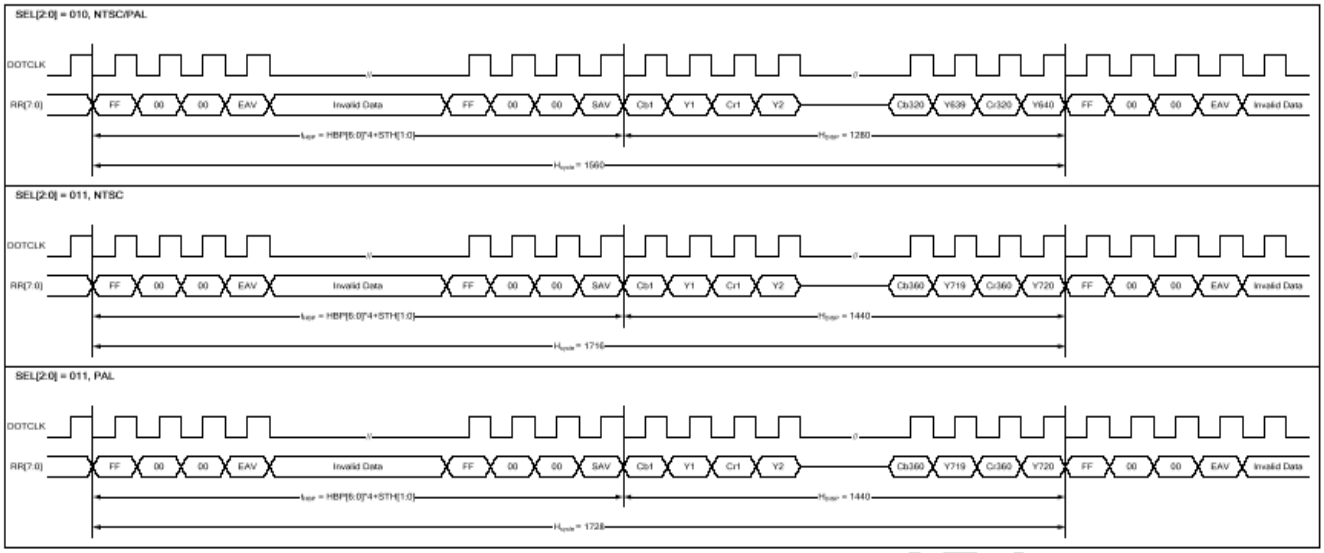

Figure 2 CCIR656 Horizontal Timing

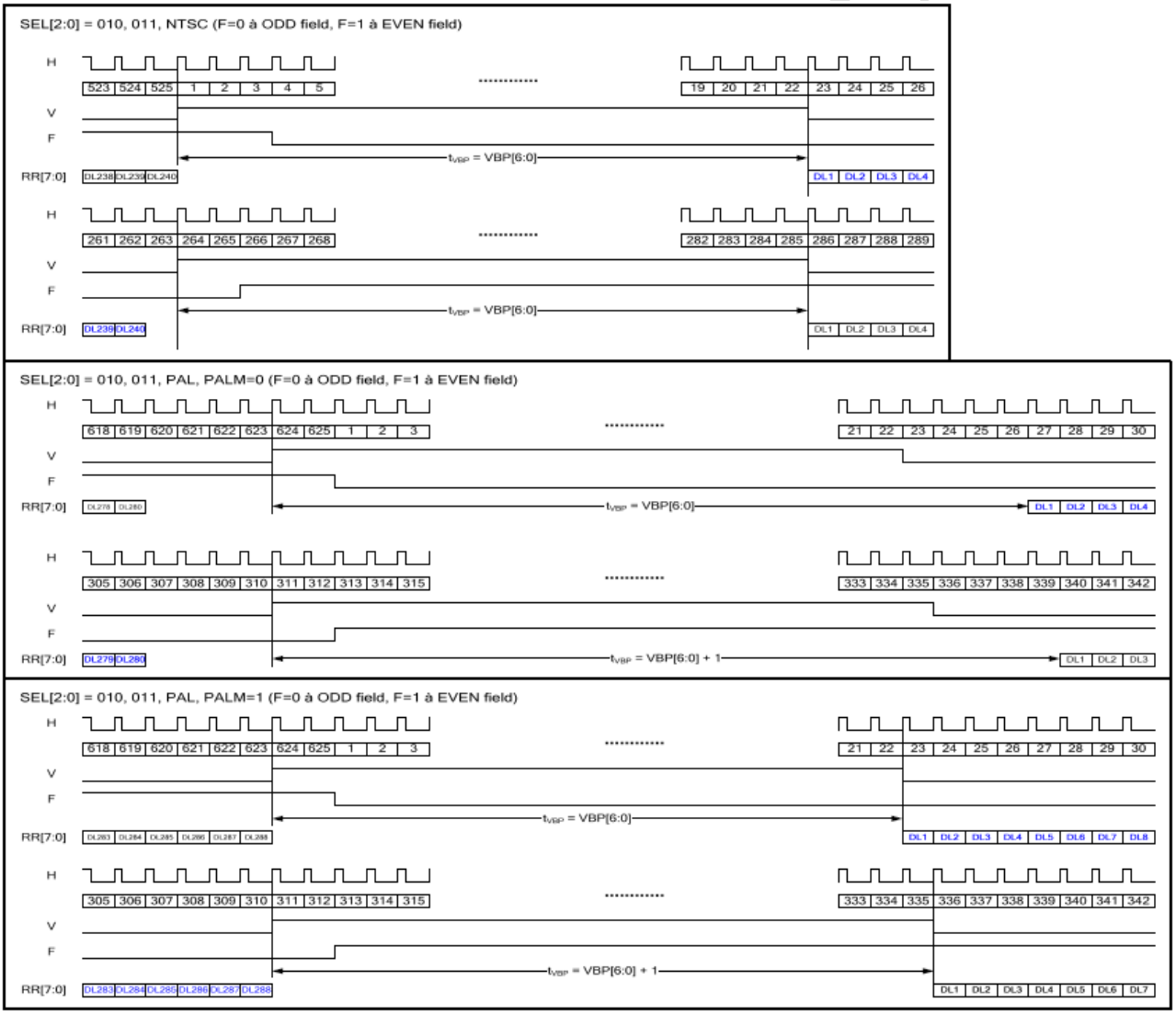

Figure 2 CCIR656 Vertical Timing

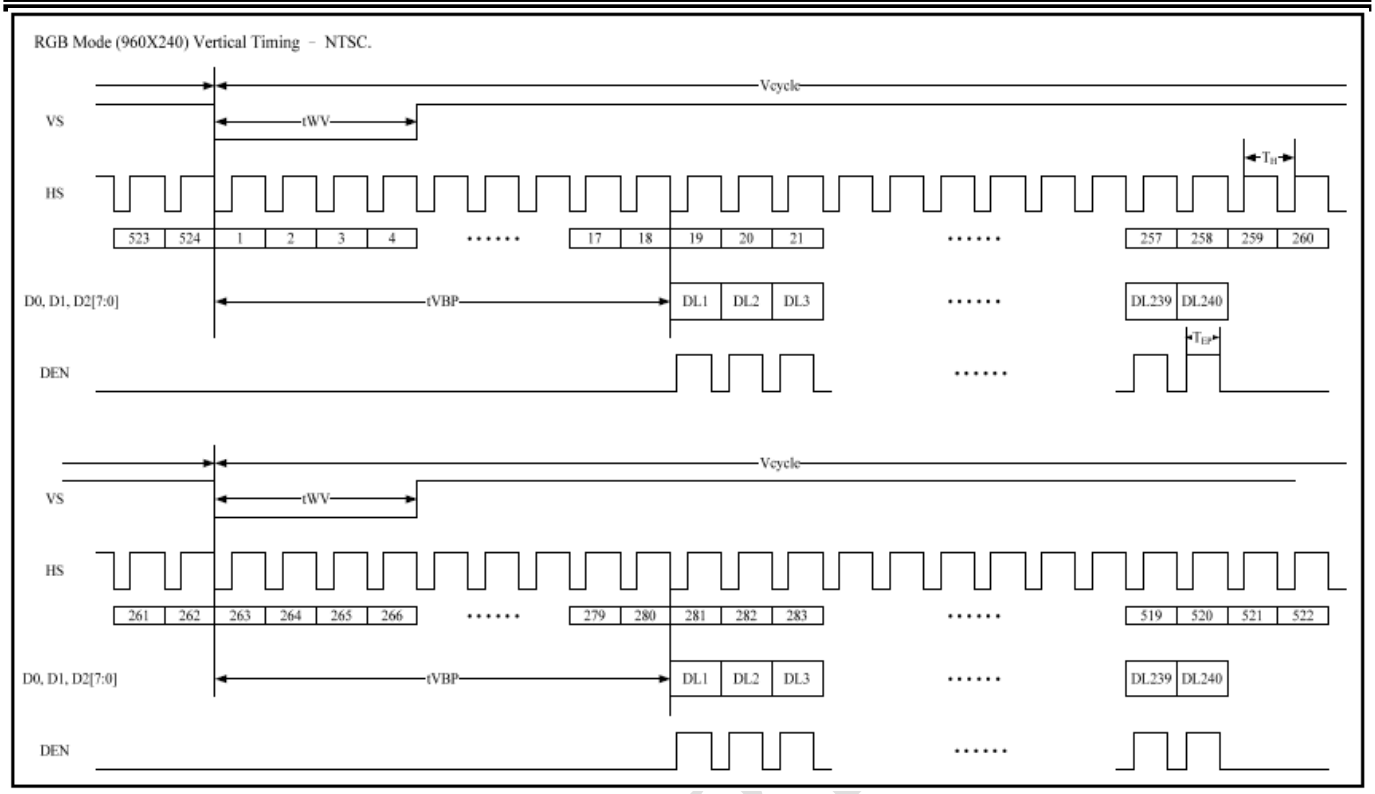

Figure 3 Digital RGB NTSC mode Vertical Data Format for 262TH

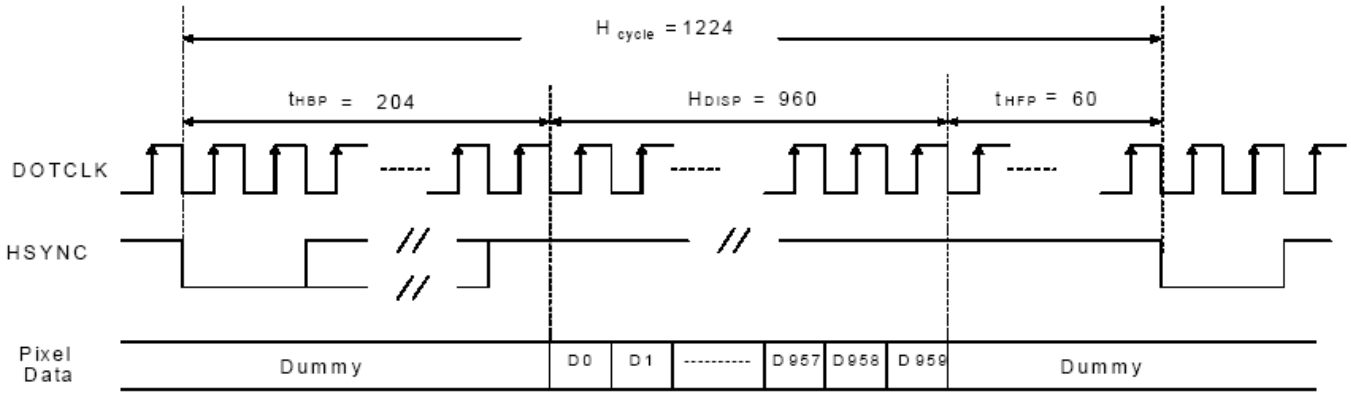

a) Horizontal D ata Transaction Timing

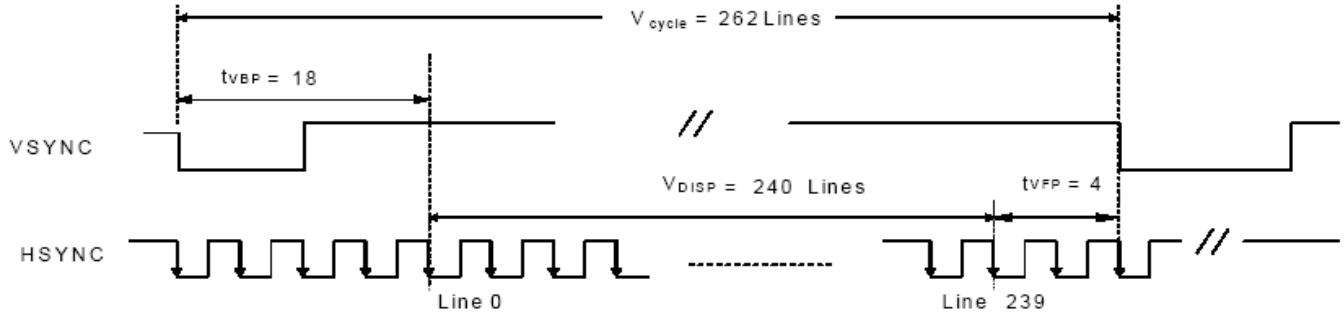

Vertical Data Transaction Timing

Figure 3 Data Transaction Timing in Serial RGB (8 bit) Interface (SYNC Mode)

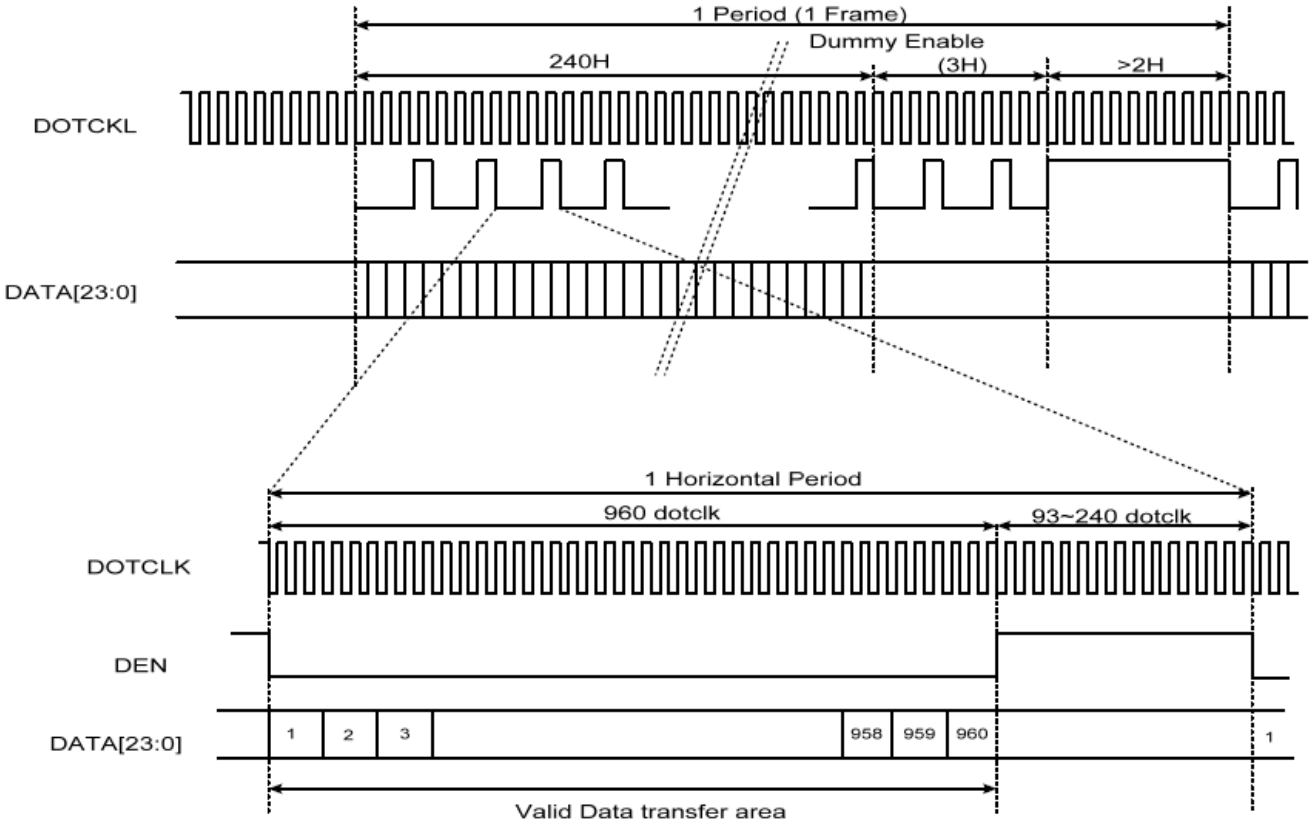

Figure 3 Data Transaction Timing in Serial RGB (8 bit) Interface (DE Mode)

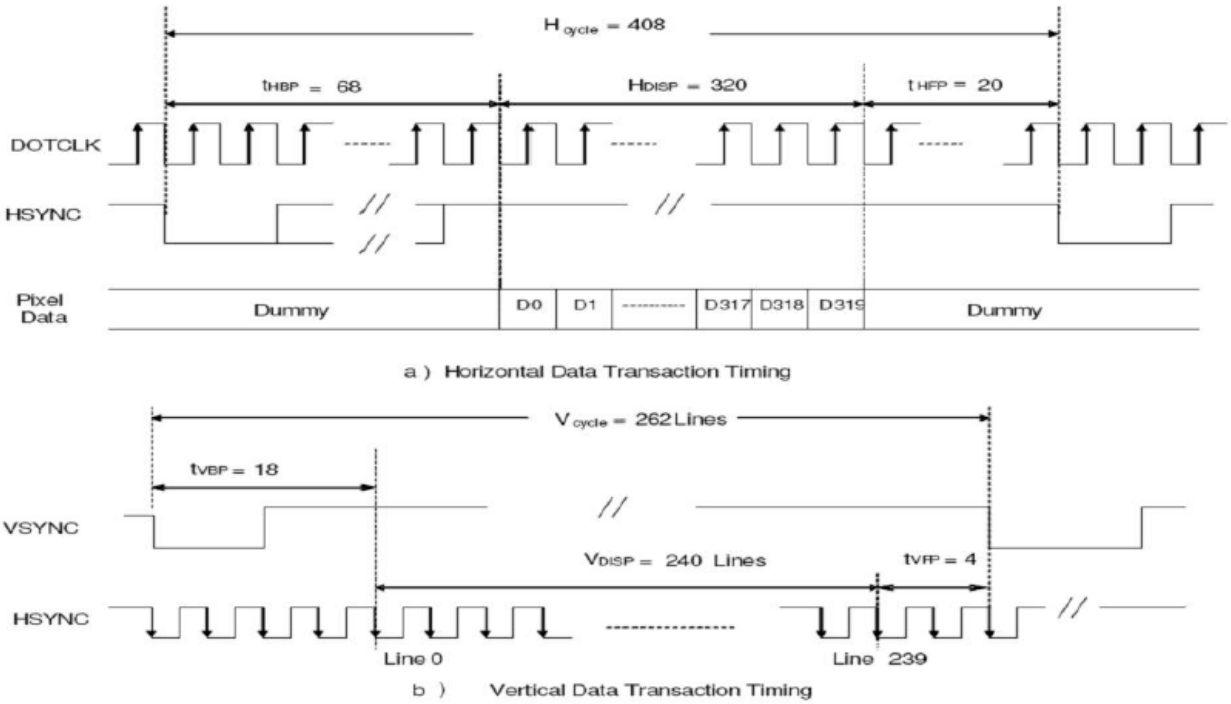

Figure 3 Data Transaction Timing in Parallel RGB (24 bit) Interface (SYNC Mode)

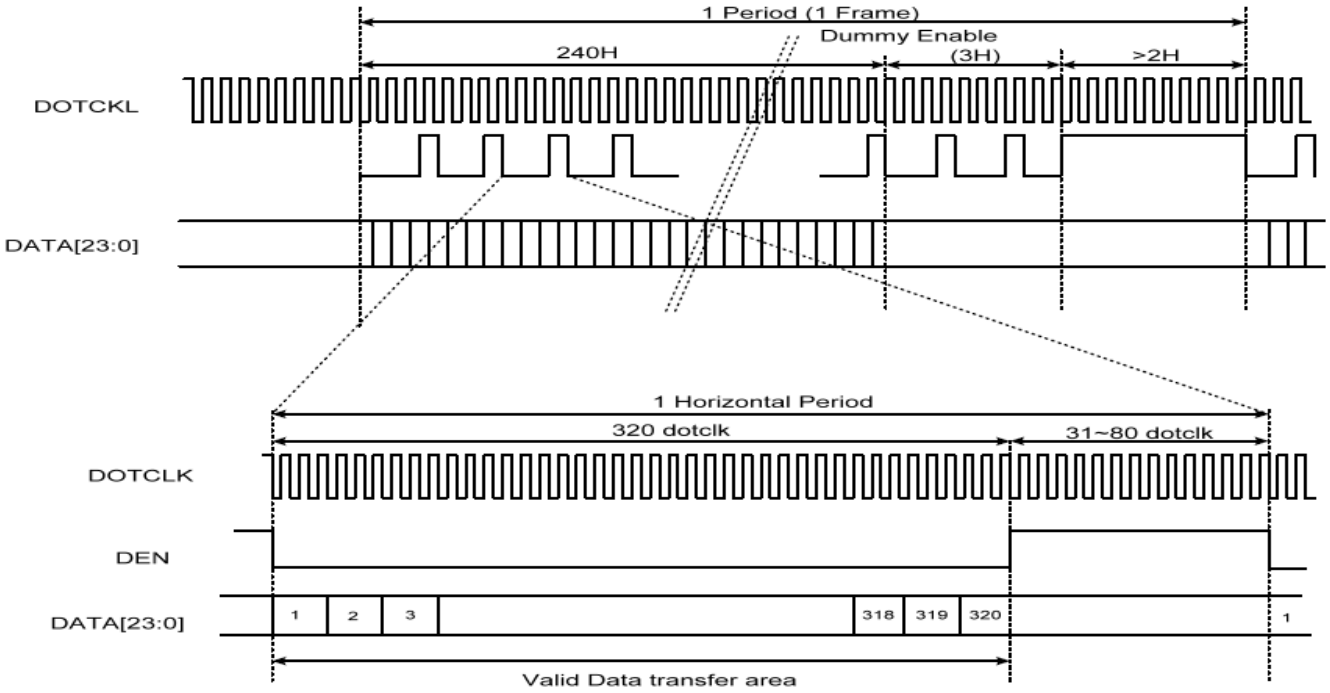

Figure 3 Data Transaction Timing in Parallel RGB (24 bit) Interface (DE Mode)

10.2. Clock and Sync waveforms

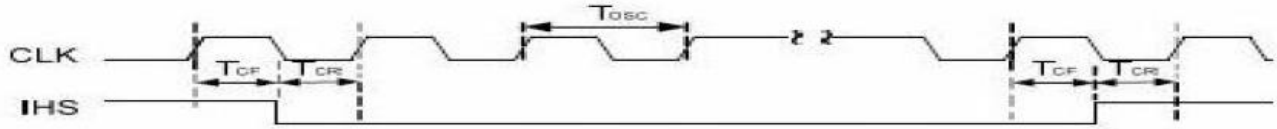

Figure 6 CLK and IHS timing waveform

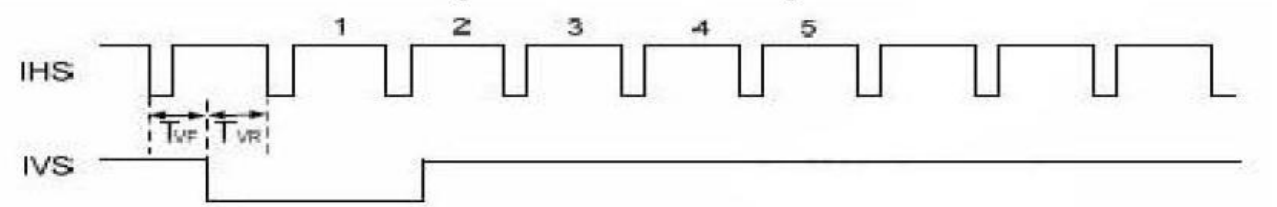

Figure 4 IHS and IVS timing waveforms

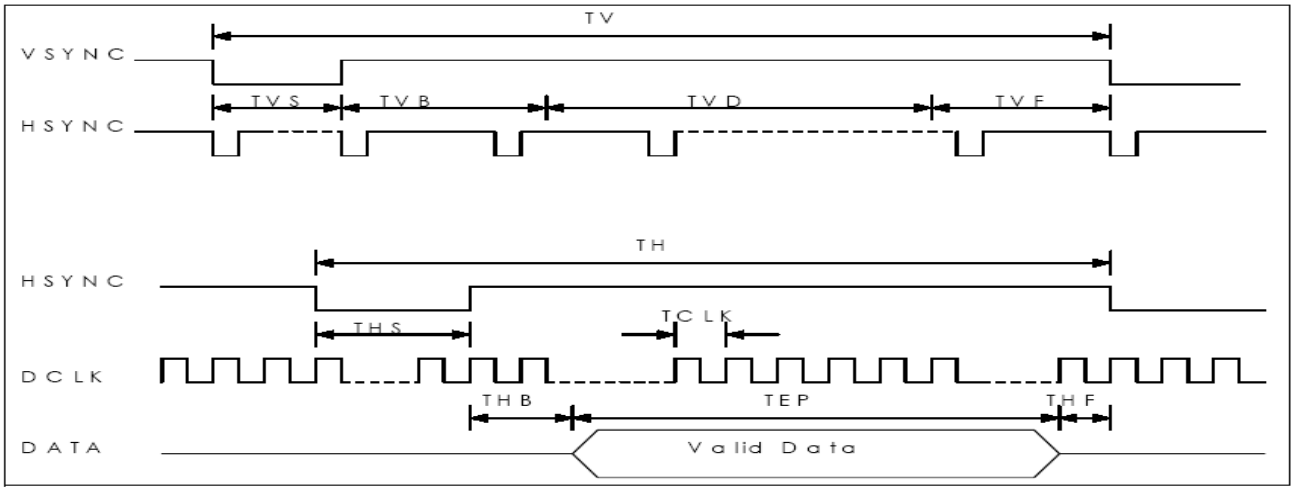

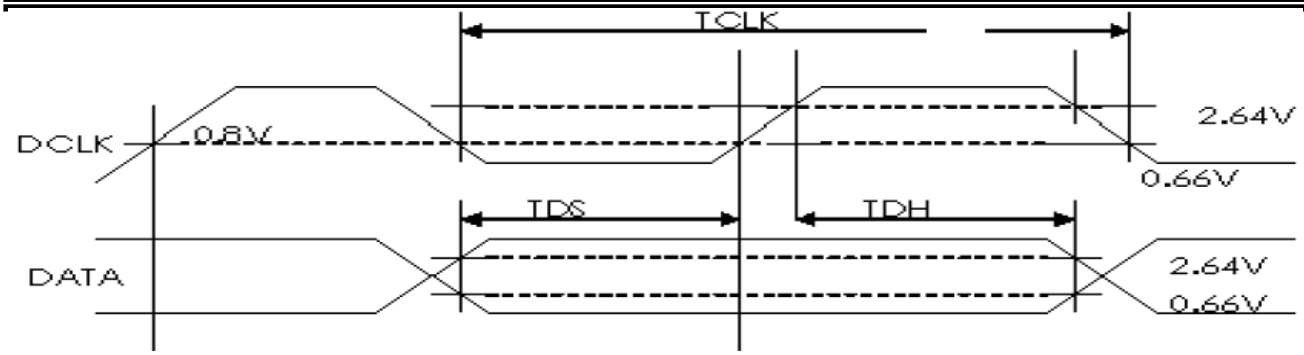

10.3. Reset Timing Chart

The RESET input must be held at least 1ms after power is stable

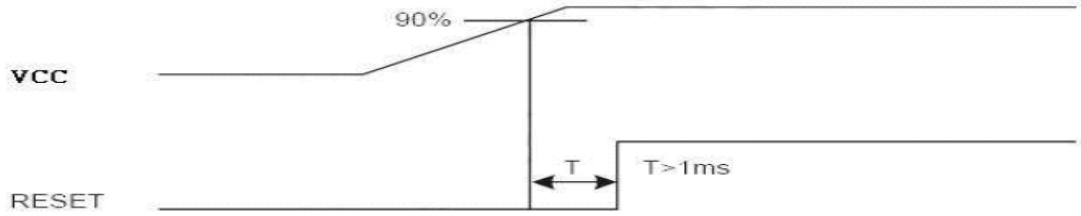

Reset timing

RAYSTAR OPTOELECTRONICS

11.Optical Characteristics

Item		Symbol	Condition.	Min	Typ.	Max.	Unit	Remark
Response time		Tr	θ=0°、Φ=0°	-	10	-	ms	Note 3
		Tf		-	15	-	ms	
Contrast ratio		CR	At optimized viewing angle	300	350	-	-	Note 4
Color Chromaticity	White	Wx	θ=0°、Φ=0	0.26	0.31	0.36	-	Note 2,6,7
		Wy		0.28	0.33	0.38	-	-
Viewing angle (Gray Scale Inversion Direction)	Hor.	ΘR	CR≧10	-	55	-	Deg.	Note 1
		ΘL		-	55	-		
	Ver.	ΦT		-	45	-		
		ΦB		-	50	-		
Brightness		-	-	250	300	-	cd/m^2	Center of display
Uniformity		(U)	-	75	-	-	%	Note 5

Ta=25±2℃, IL=20mA

Note 1: Definition of viewing angle range

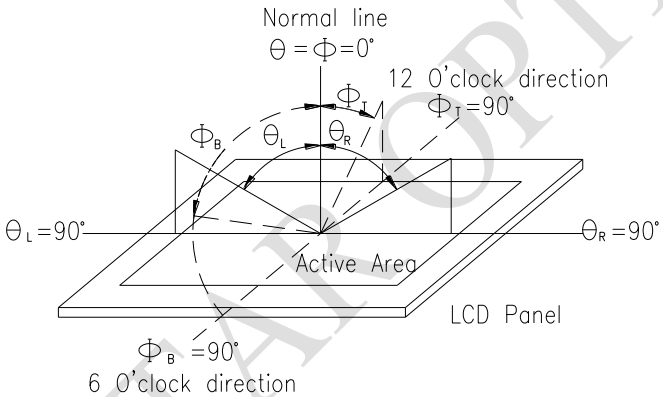

Fig. 11.1. Definition of viewing angle

Note 2: Test equipment setup:

After stabilizing and leaving the panel alone at a driven temperature for 10 minutes, the measurement should be executed. Measurement should be executed in a stable, windless, and dark room. Optical specifications are measured by Topcon BM-7orBM-5 luminance meter 1.0° field of view at a distance of 50cm and normal direction.

RAYSTAR OPTRONICS

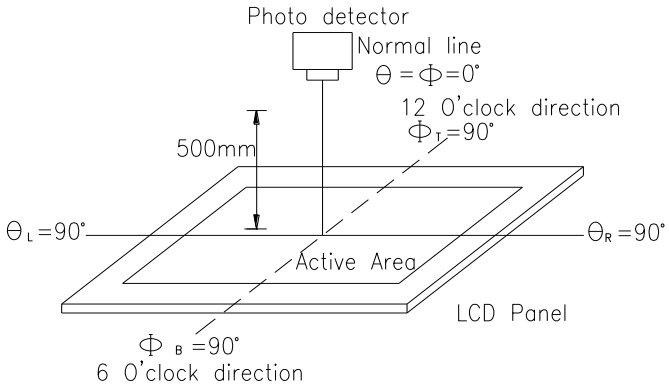

Fig. 11.2. Optical measurement system setup

Note 3: Definition of Response time:
The response time is defined as the LCD optical switching time interval between “White” state and “Black” state. Rise time, Tr, is the time between photo detector output intensity changed from 90%to 10%. And fall time, Tf, is the time between photo detector output intensity changed from 10%to 90%

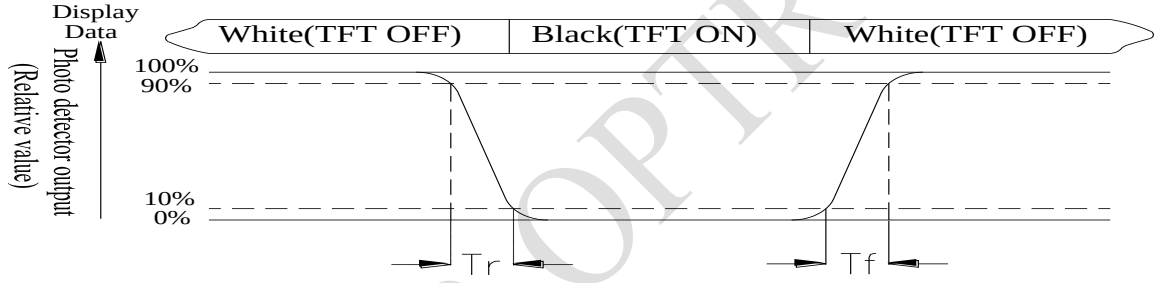

Note 4: Definition of contrast ratio:
The contrast ratio is defined as the following expression.

$$\text{Contrast ratio (CR)} = \frac{\text{Luminance measured when LCD on the "White" state}}{\text{Luminance measured when LCD on the "Black" state}}$$

RAYSTAR OPTRONICS

Note 5: Definition of Luminance Uniformity
Active area is divided into 9 measuring areas (reference the picture in below). Every measuring point is placed at the center of each measuring area.
Luminance Uniformity (U) = Lmin/Lmax x100%
L = Active area length
W = Active area width

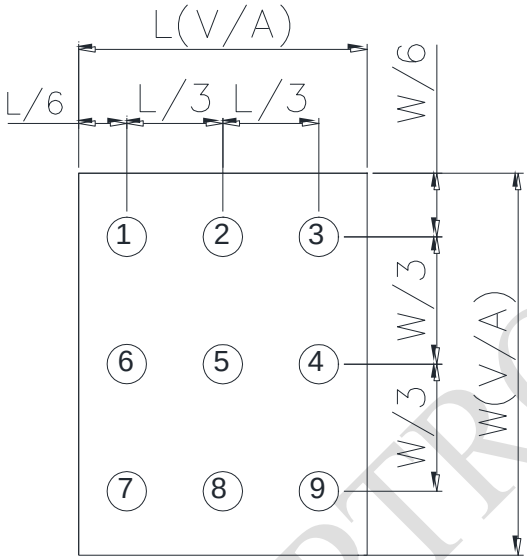

Fig11.3. Definition of uniformity

Note 6: Definition of color chromaticity (CIE 1931)
Color coordinates measured at the center point of LCD

Note 7: Measured at the center area of the panel when all the input terminals of LCD panel are electrically opened.

RAYSTAR OPTRONICS

12.Reliability

Content of Reliability Test (Wide temperature, -20℃~70℃)

Environmental Test			
Test Item	**Content of Test**	**Test Condition**	**Note**
High Temperature storage	Endurance test applying the high storage temperature for a long time.	80℃ 200hrs	2
Low Temperature storage	Endurance test applying the low storage temperature for a long time.	-30℃ 200hrs	1,2
High Temperature Operation	Endurance test applying the electric stress (Voltage & Current) and the thermal stress to the element for a long time.	70℃ 200hrs	——
Low Temperature Operation	Endurance test applying the electric stress under low temperature for a long time.	-20℃ 200hrs	1
High Temperature/ Humidity Operation	The module should be allowed to stand at 60℃,90%RH max	60℃,90%RH 96hrs	1,2
Thermal shock resistance	The sample should be allowed stand the following 10 cycles of operation -20℃ 25℃ 70℃ 30min 5min 30min 1 cycle	-20℃/70℃ 10 cycles	——
Vibration test	Endurance test applying the vibration during transportation and using.	Total fixed amplitude : 1.5mm Vibration Frequency : 10~55Hz One cycle 60 seconds to 3 directions of X,Y,Z for Each 15 minutes	3
Static electricity test	Endurance test applying the electric stress to the terminal.	VS=±600V(contact) ,±800v(air), RS=330Ω CS=150pF 10 times	——

Note1: No dew condensation to be observed.

Note2: The function test shall be conducted after 4 hours storage at the normal Temperature and humidity after remove from the test chamber.

Note3: The packing have to including into the vibration testing.

RAYSTAR OPTRONICS

13.Touch Panel Information

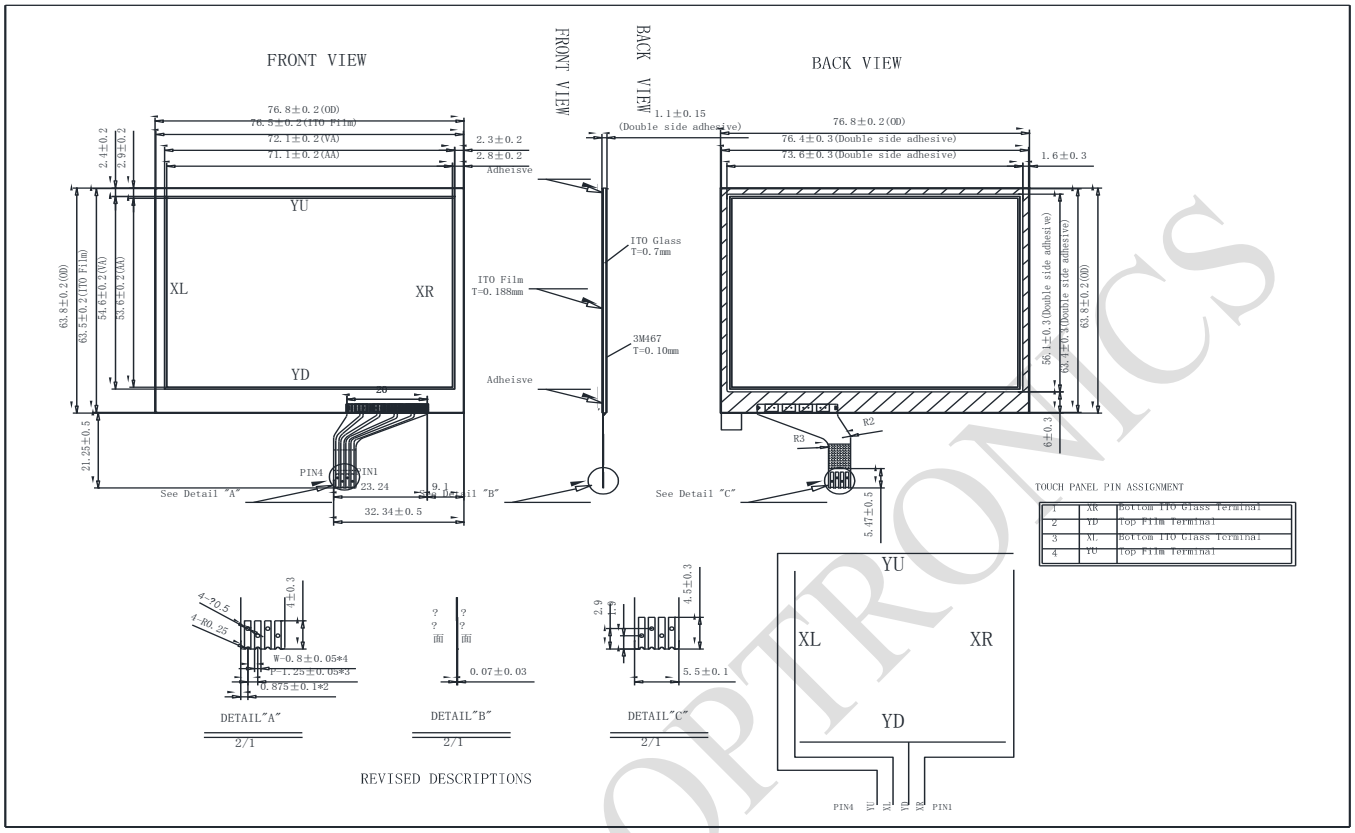

RAYSTAR OPTRONICS

13.1. Resistance Touch Panel General Specifications

Item	Description
Driving condition	DC5V
Operating force	60~150g
Linearity max	≤±1.5%
Insulating resistance	＞20MΩ，25V(DC)
Light transparence	70%
Structure type	ITO Film/ITO Glass(F/G)
Surface Hardness	3H typ
Pen Hitting Durability (with the silicon rubber)	＞1000,000 times
X resistance	200~1100Ω
Y resistance	200~1100Ω

RAYSTAR OPTRONICS

Page: 1

LCM Sample Estimate Feedback Sheet		
Module Number：_____		
1、Panel Specification：		
1. Panel Type：	□ Pass	□ NG ,_____
2. View Direction：	□ Pass	□ NG ,_____
3. Numbers of Dots：	□ Pass	□ NG ,_____
4. View Area：	□ Pass	□ NG ,_____
5. Active Area：	□ Pass	□ NG ,_____
6.Operating Temperature：	□ Pass	□ NG ,_____
7.Storage Temperature：	□ Pass	□ NG ,_____
8.Others：_____		
2、Mechanical Specification：		
1. PCB Size：	□ Pass	□ NG ,_____
2.Frame Size：	□ Pass	□ NG ,_____
3.Materal of Frame：	□ Pass	□ NG ,_____
4.Connector Position：	□ Pass	□ NG ,_____
5.Fix Hole Position：	□ Pass	□ NG ,_____
6.Backlight Position：	□ Pass	□ NG ,_____
7. Thickness of PCB：	□ Pass	□ NG ,_____
8. Height of Frame to PCB：	□ Pass	□ NG ,_____
9.Height of Module：	□ Pass	□ NG ,_____
10.Others：	□ Pass	□ NG ,_____
3、Relative Hole Size：		
1.Pitch of Connector：	□ Pass	□ NG ,_____
2.Hole size of Connector：	□ Pass	□ NG ,_____
3.Mounting Hole size：	□ Pass	□ NG ,_____
4.Mounting Hole Type：	□ Pass	□ NG ,_____
5.Others：	□ Pass	□ NG ,_____
4、Backlight Specification：		
1.B/L Type：	□ Pass	□ NG ,_____
2.B/L Color：	□ Pass	□ NG ,_____
3.B/L Driving Voltage (Reference for LED Type)：□ Pass □ NG ,_____		
4.B/L Driving Current：	□ Pass	□ NG ,_____
5.Brightness of B/L：	□ Pass	□ NG ,_____
6.B/L Solder Method：	□ Pass	□ NG ,_____
7.Others：	□ Pass	□ NG ,_____

>> **Go to page 2** <<

RAYSTAR OPTRONICS

Module Number：_____

5、Electronic Characteristics of Module：

1.Input Voltage：	□ Pass	□ NG ,_____
2.Supply Current：	□ Pass	□ NG ,_____
3.Driving Voltage for LCD：	□ Pass	□ NG ,_____
4.Contrast for LCD：	□ Pass	□ NG ,_____
5.B/L Driving Method：	□ Pass	□ NG ,_____
6.Negative Voltage Output：	□ Pass	□ NG ,_____
7.Interface Function：	□ Pass	□ NG ,_____
8.LCD Uniformity：	□ Pass	□ NG ,_____
9.ESD test：	□ Pass	□ NG ,_____
10.Others：	□ Pass	□ NG ,_____

6、Summary：

Sales signature：_____

Customer Signature：_____ **Date**： / /

RAYSTAR OPTRONICS